ASSEMBLY INSTRUCTIONS
JAZMIN BAR HEIGHT TABLE

1 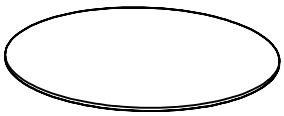 X1 Top	2 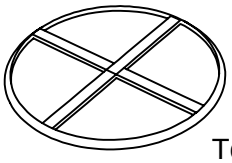 X1 Top frame	3  X1 Base
4  X1 Leg	5 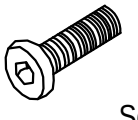 X4 Screw M6×20	6  X4 Screw M10×35
7  X4 M6 spacer	8 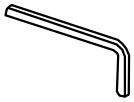 X1 M6 Wrench	9 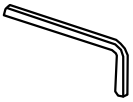 X1 M10 Wrench

STEP1

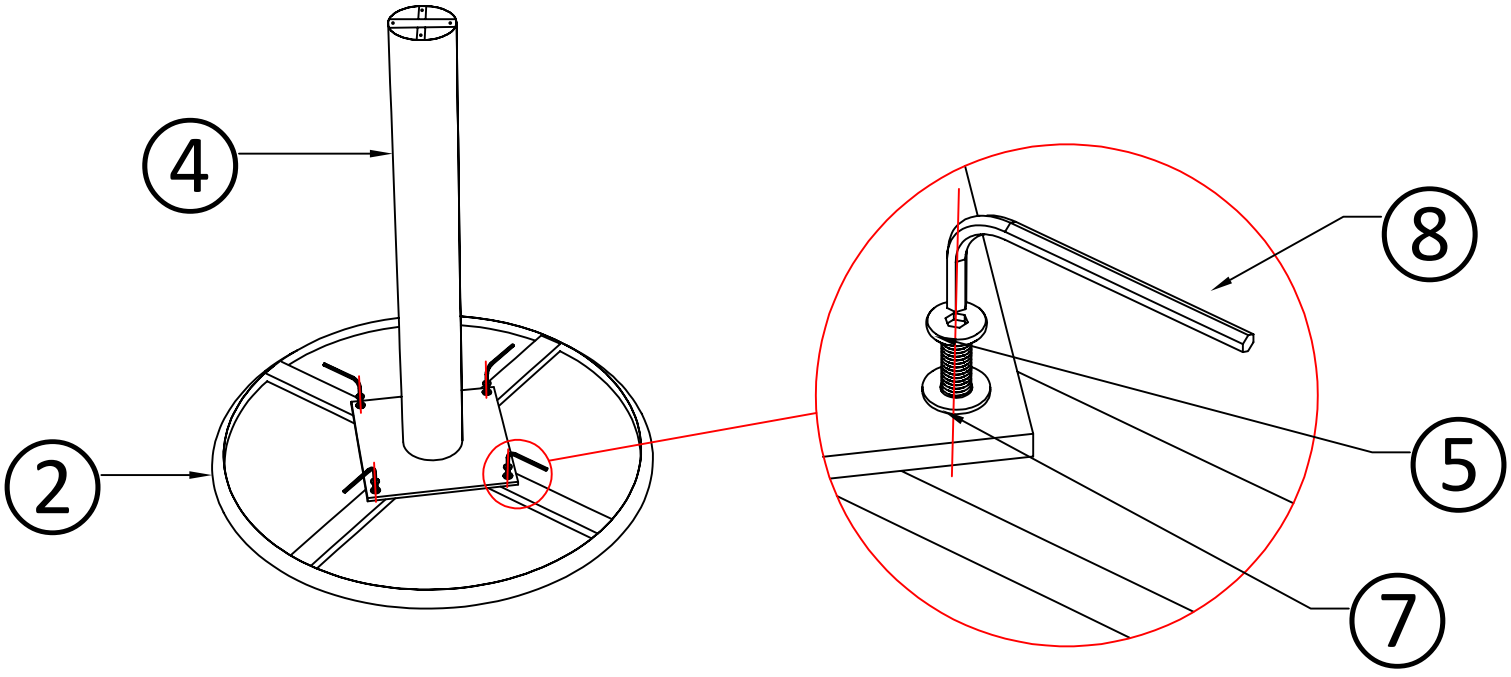

STEP 2

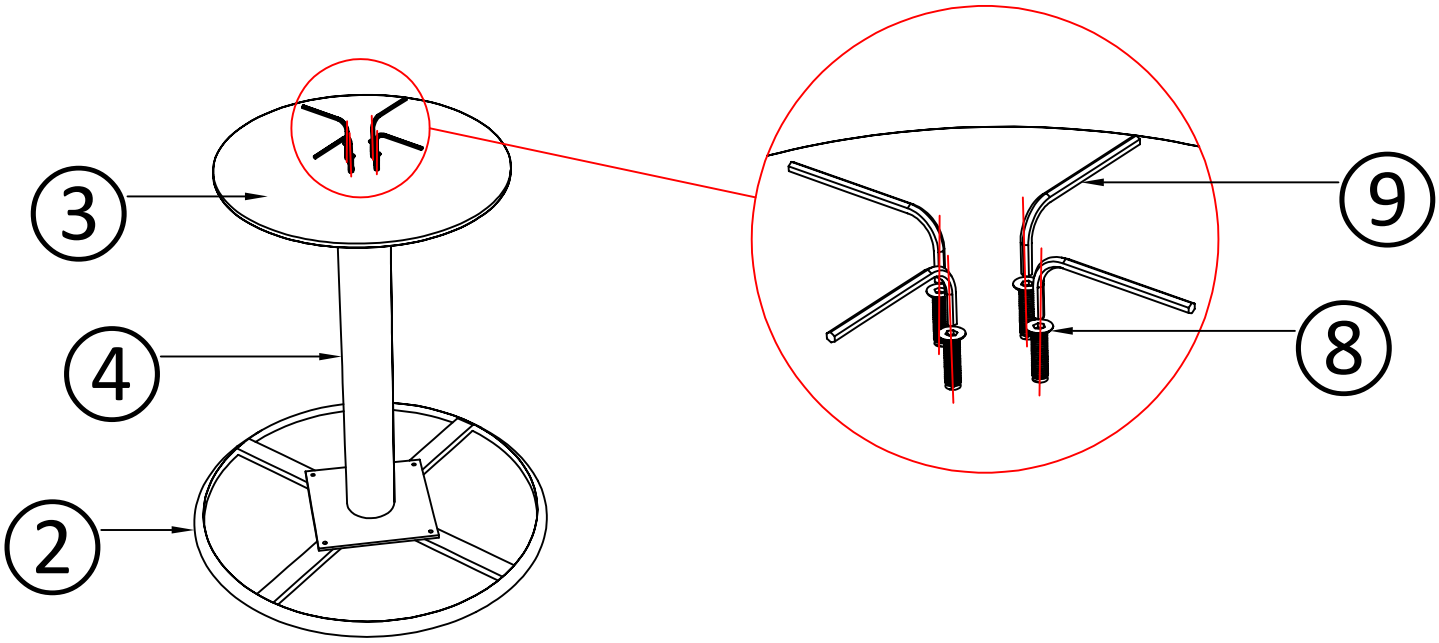

STEP 3

