ASSEMBLY INSTRUCTIONS
AVILA COFFEE TABLE

1 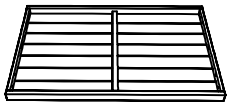 X1 Top	2 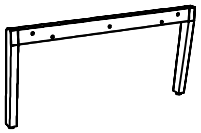 X2 Leg	3 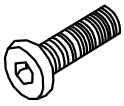 X10 Screw M6×30
4  X10 M6 spacer	5 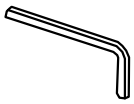 X1 Wrench	

STEP 1

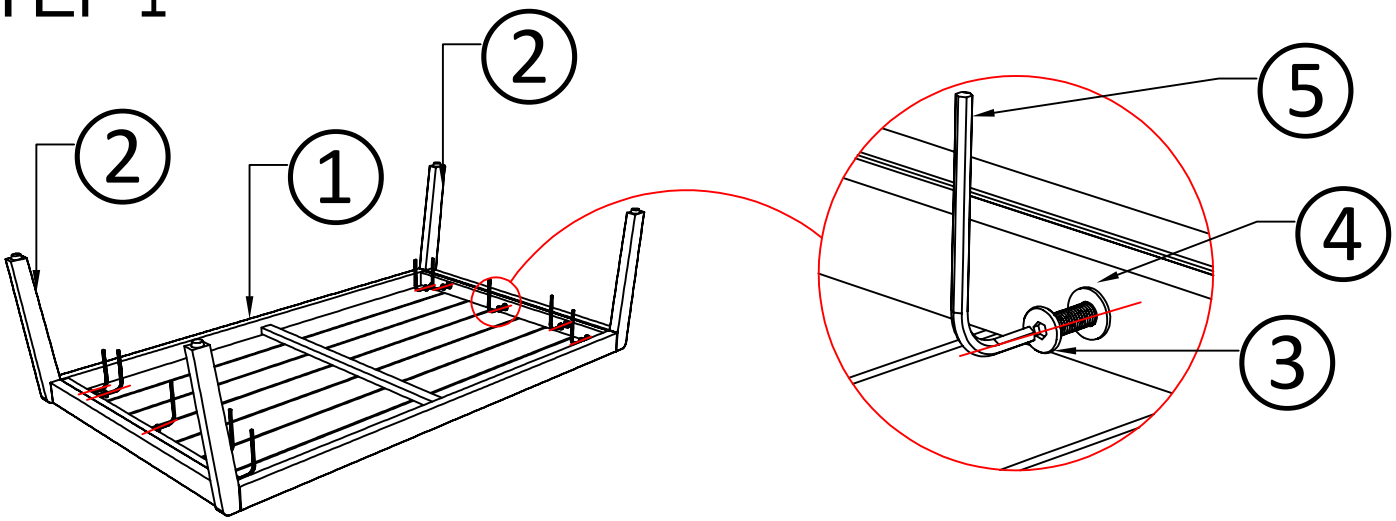

STEP 2

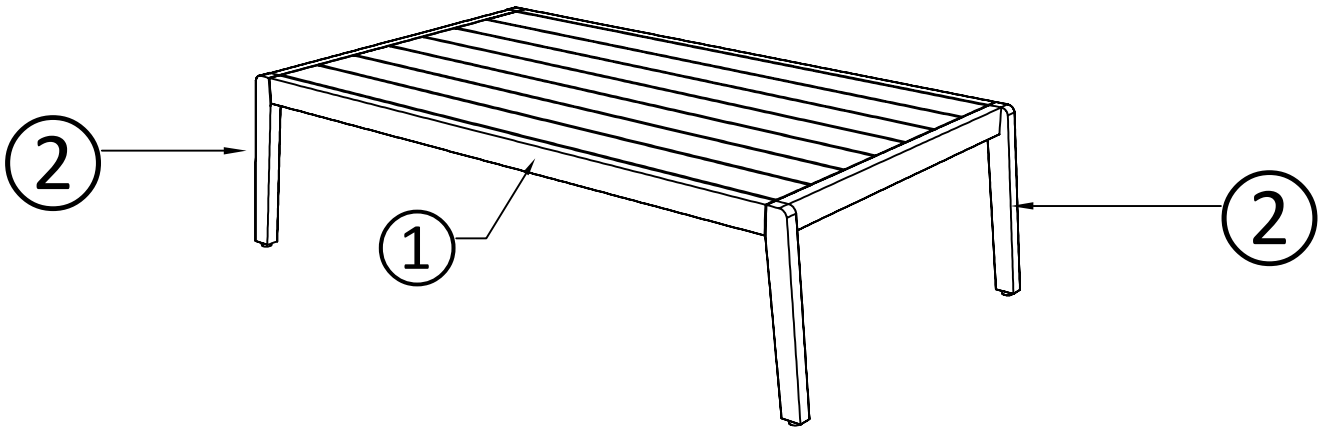

ASSEMBLY INSTRUCTIONS
AVILA OD SIDE TABLE

1 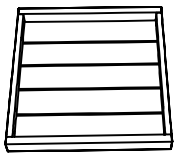 X1 Top	2 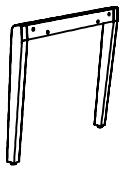 X2 Leg	3 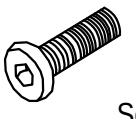 X8 Screw M6×30
4  X8 M6 spacer	5 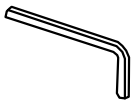 X1 Wrench	

STEP 1

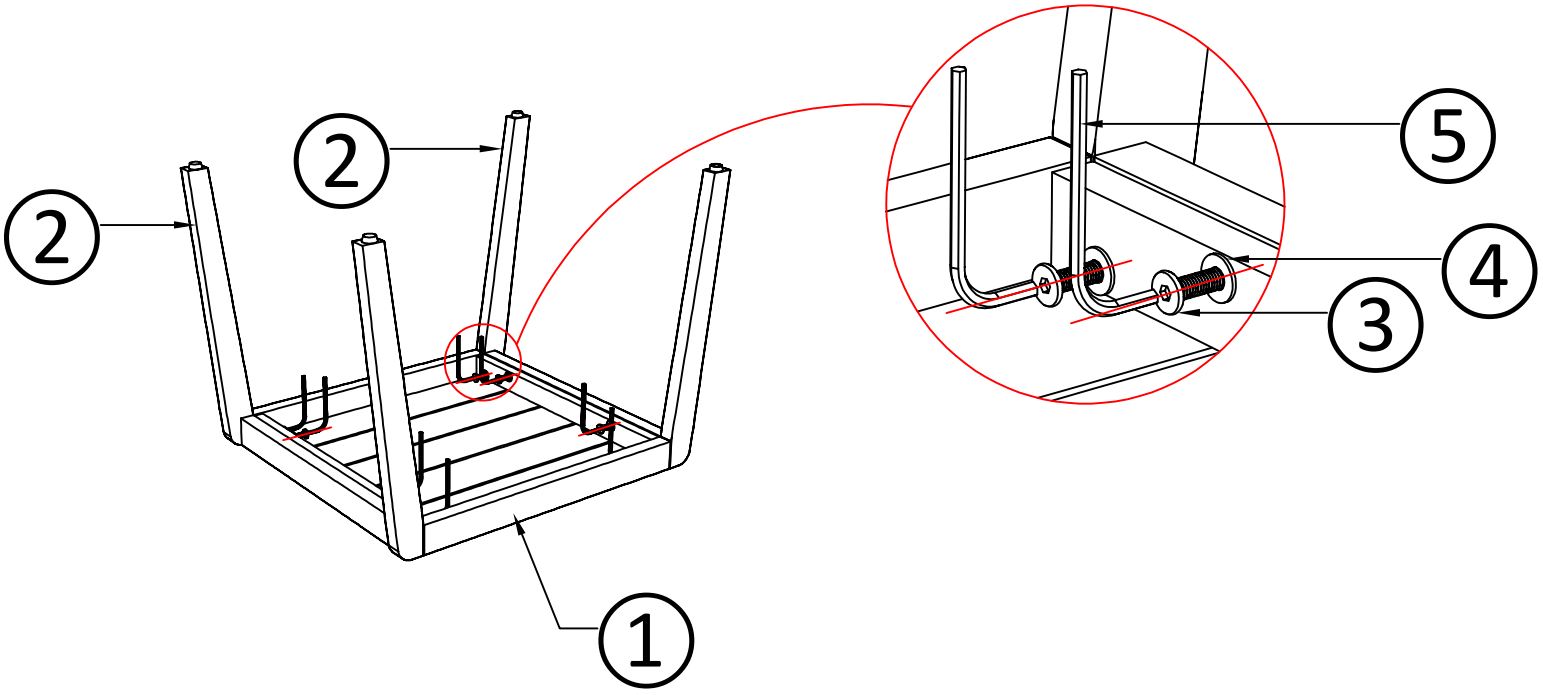

STEP 2

