ASSEMBLY INSTRUCTIONS
CIELA DINING TABLE

1 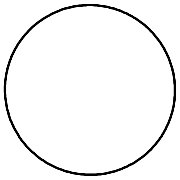 X1 Top	2 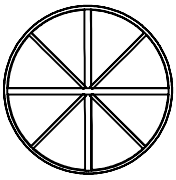 X1 Top frame	3 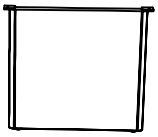 X1 Big Leg
4 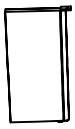 X2 Small Leg	5 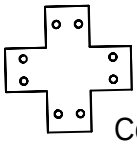 X2 Connect piece	6 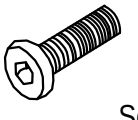 X4 Screw M6×20
7  X16 Screw M6×20	8  X4 M6 spacer	9 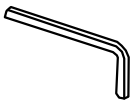 X1 Wrench

STEP 1

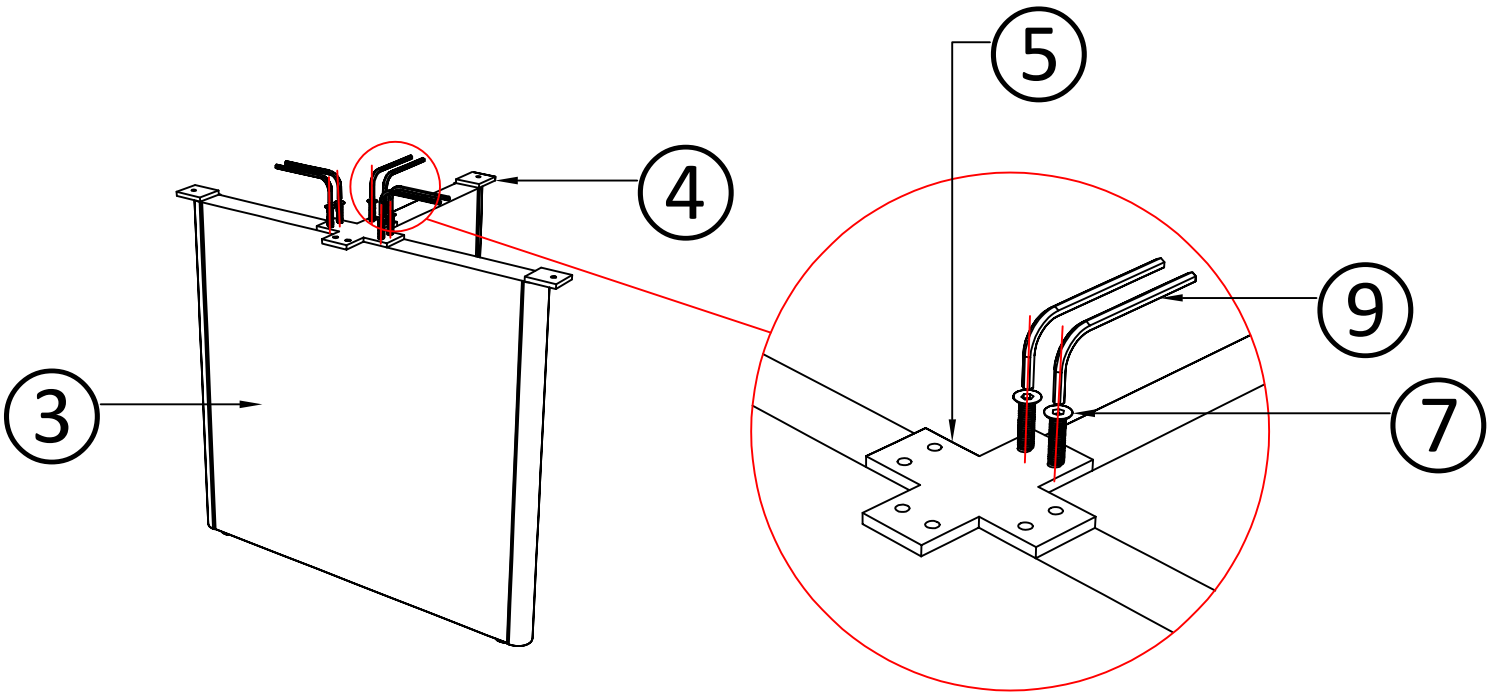

armen LIVING

STEP 2

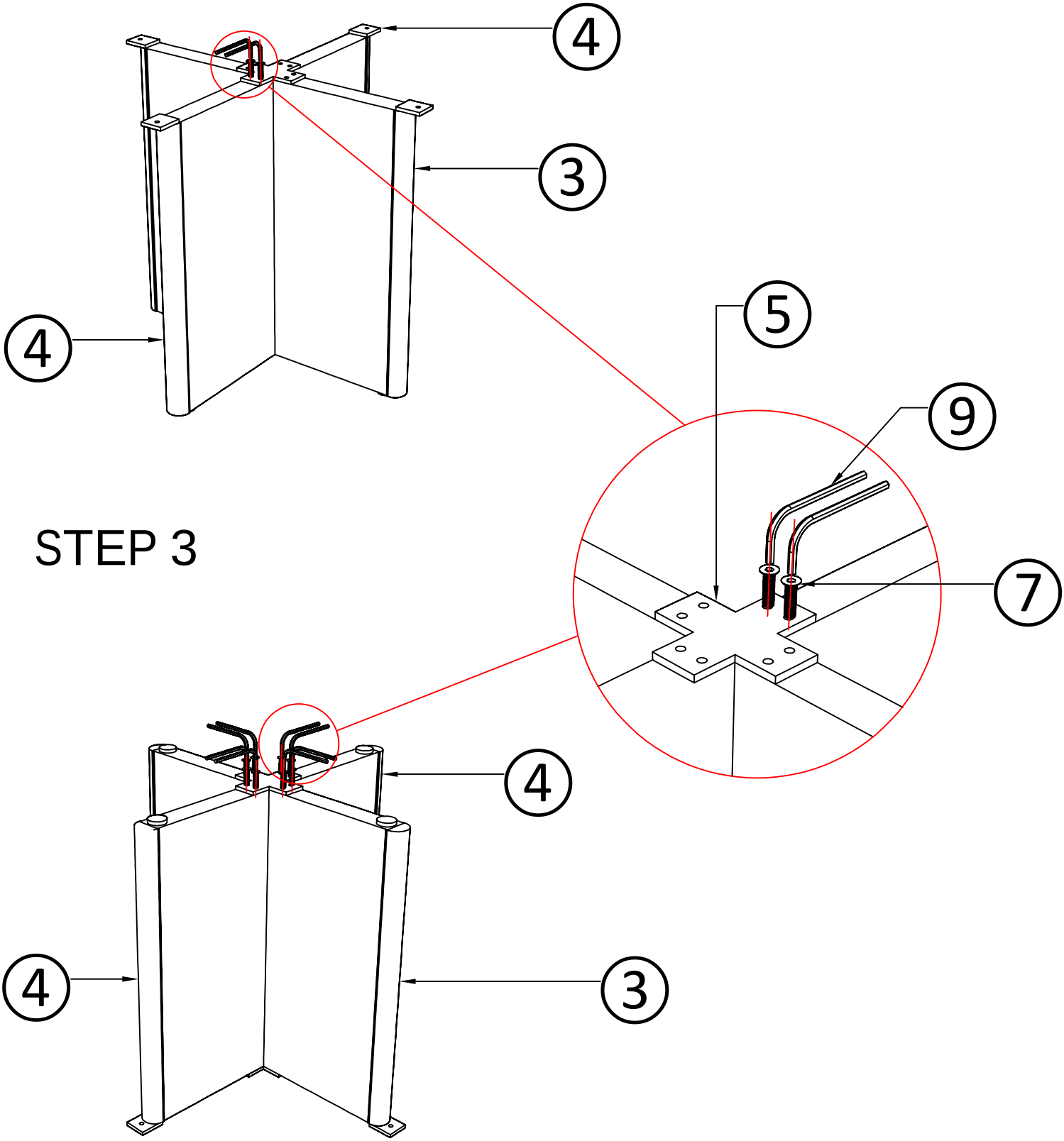

STEP 3

armen LIVING

STEP 4

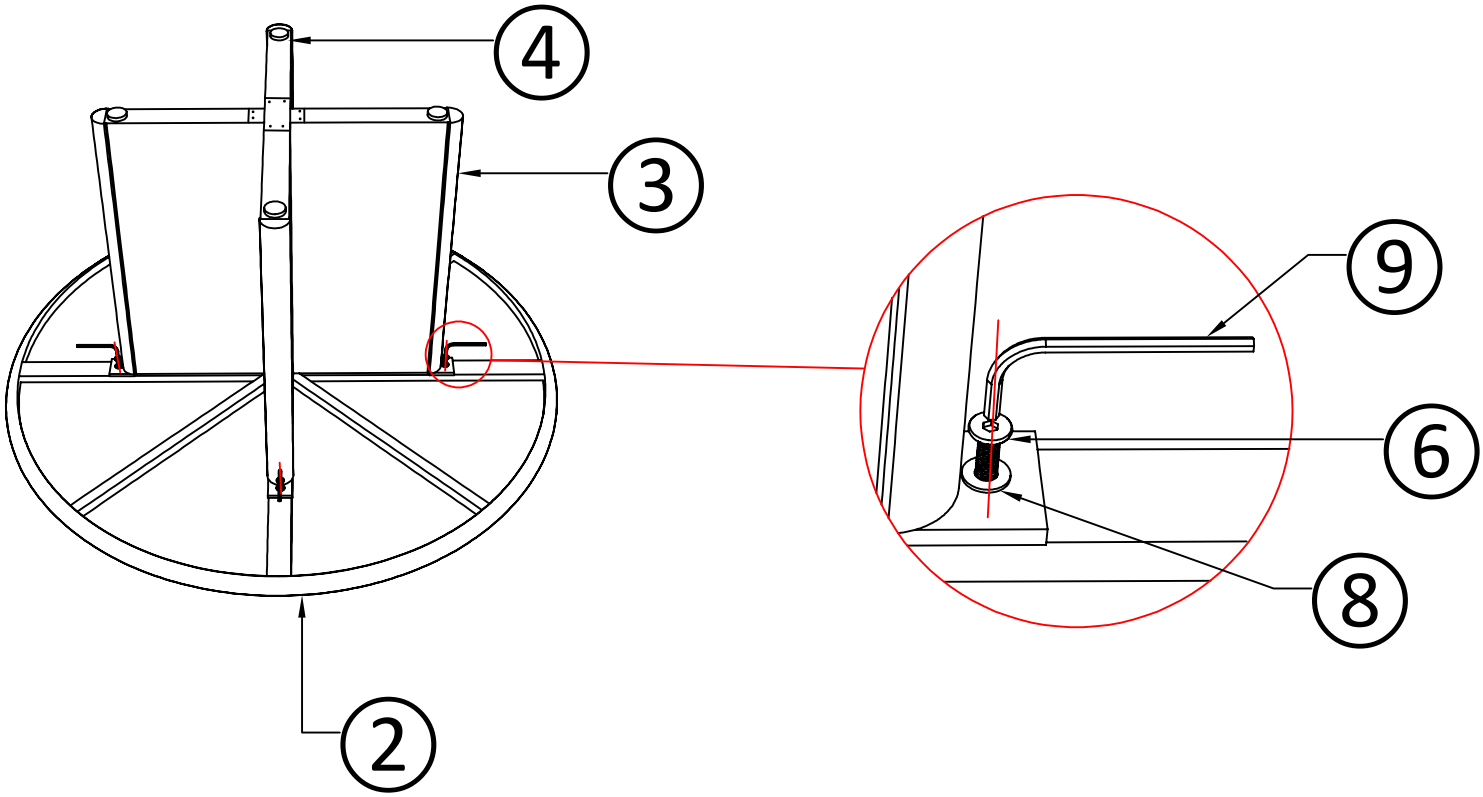

STEP 5

